Deutsches Institut für Bautechnik

Zulassungsstelle für Bauprodukte und Bauarten

Bautechnisches Prüfamt

Eine vom Bund und den Ländern gemeinsam getragene Anstalt des öffentlichen Rechts

Kolonnenstraße 30 B
D-10829 Berlin
Tel.: +49 30 78730-0
Fax: +49 30 78730-320
E-Mail: dibt@dibt.de
www.dibt.de

Authorised and notified according to Article 10 of the Council Directive of 21 December 1988 on the approximation of laws, regulations and administrative provisions of Member States relating to construction products (89/106/EEC)

Deutsches Institut für Bautechnik

DIBt

Mitglied der EOTA
Member of EOTA

European Technical Approval ETA-09/0394

English translation prepared by DIBt - Original version in German language

Handelsbezeichnung *Trade name*	fischer termoz CN 8
Zulassungsinhaber *Holder of approval*	fischerwerke GmbH & Co. KG Weinhalde 14-18 72178 Waldachtal DEUTSCHLAND
Zulassungsgegenstand und Verwendungszweck *Generic type and use of construction product*	Nageldübel zur Verankerung von außenseitigen Wärmedämm-Verbundsystemen mit Putzschicht in Beton und Mauerwerk *Nailed-in plastic anchor for fixing of external thermal insulation composite systems with rendering in concrete and masonry*
Geltungsdauer: *Validity:*	vom *from* 26 January 2011 bis *to* 4 February 2015
Herstellwerk *Manufacturing plant*	fischerwerke GmbH & Co. KG, Standort Tumlingen

Diese Zulassung umfasst *This Approval contains*	17 Seiten einschließlich 7 Anhänge *17 pages including 7 annexes*
Diese Zulassung ersetzt *This Approval replaces*	ETA-09/0394 mit Geltungsdauer vom 04.02.2010 bis 04.02.2015 *ETA-09/0394 with validity from 04.02.2010 to 04.02.2015*

I LEGAL BASES AND GENERAL CONDITIONS

1 This European technical approval is issued by Deutsches Institut für Bautechnik in accordance with:

- Council Directive 89/106/EEC of 21 December 1988 on the approximation of laws, regulations and administrative provisions of Member States relating to construction products[1], modified by Council Directive 93/68/EEC[2] and Regulation (EC) N° 1882/2003 of the European Parliament and of the Council[3];
- Gesetz über das In-Verkehr-Bringen von und den freien Warenverkehr mit Bauprodukten zur Umsetzung der Richtlinie 89/106/EWG des Rates vom 21. Dezember 1988 zur Angleichung der Rechts- und Verwaltungsvorschriften der Mitgliedstaaten über Bauprodukte und anderer Rechtsakte der Europäischen Gemeinschaften (Bauproduktengesetz - BauPG) vom 28. April 1998[4], as amended by law of 31 October 2006[5];
- Common Procedural Rules for Requesting, Preparing and the Granting of European technical approvals set out in the Annex to Commission Decision 94/23/EC[6];
- Guideline for European technical approval of "Plastic anchors for fixing of external thermal insulation composite systems with rendering", ETAG 014.

2 Deutsches Institut für Bautechnik is authorized to check whether the provisions of this European technical approval are met. Checking may take place in the manufacturing plant. Nevertheless, the responsibility for the conformity of the products to the European technical approval and for their fitness for the intended use remains with the holder of the European technical approval.

3 This European technical approval is not to be transferred to manufacturers or agents of manufacturers other than those indicated on page 1, or manufacturing plants other than those indicated on page 1 of this European technical approval.

4 This European technical approval may be withdrawn by Deutsches Institut für Bautechnik, in particular pursuant to information by the Commission according to Article 5(1) of Council Directive 89/106/EEC.

5 Reproduction of this European technical approval including transmission by electronic means shall be in full. However, partial reproduction can be made with the written consent of Deutsches Institut für Bautechnik. In this case partial reproduction has to be designated as such. Texts and drawings of advertising brochures shall not contradict or misuse the European technical approval.

6 The European technical approval is issued by the approval body in its official language. This version corresponds fully to the version circulated within EOTA. Translations into other languages have to be designated as such.

1 Official Journal of the European Communities L 40, 11 February 1989, p. 12
2 Official Journal of the European Communities L 220, 30 August 1993, p. 1
3 Official Journal of the European Union L 284, 31 October 2003, p. 25
4 *Bundesgesetzblatt Teil I 1998*, p. 812
5 *Bundesgesetzblatt Teil I 2006*, p. 2407, 2416
6 Official Journal of the European Communities L 17, 20 January 1994, p. 34

II SPECIFIC CONDITIONS OF THE EUROPEAN TECHNICAL APPROVAL

1 Definition of product/ products and intended use

1.1 Definition of the construction product

The fischer nailed-in anchor termoz CN 8 consists of an anchor sleeve with an enlarged shaft made of polypropylene, an insulation plate made of glass fibre reinforced polyamide and a special compound nail consisting of two parts, one made of glass fibre reinforced polyamide for the shaft element and the other part made of galvanised steel.

The anchor may in addition be combined with the anchor plates DT 90, DT 110 and DT 140.

The installed anchor is shown in Annex 1.

1.2 Intended use

The anchor is intended to be used for anchorages for which requirements for safety in use in the sense of the Essential Requirement 4 of Council Directive 89/106/EEC shall be fulfilled and failure of anchorages made with these products would cause low risk to human life. The anchor is to be used only as multiple fixing for the anchorage of bonded thermal insulation composite systems (ETICS) according to ETAG 004 in concrete and masonry. The base material shall consist of reinforced or unreinforced normal weight concrete of strength class C12/15 at minimum and C50/60 at maximum according to EN 206-1:2000-12, of masonry walls according to Annex 4, Table 5 or of prefabricated reinforced components of lightweight aggregate concrete (LAC) according to EN 1520:2002+AC:2003.

The anchor may only be used for transmission of wind suction loads and shall not be used for the transmission of dead loads of the thermal insulation composite system. The dead loads have to be transmitted by the bonding of the thermal insulation composite system.

The provisions made in this European Technical Approval are based on an assumed working life of the anchor of 25 years. The indications given on the working life cannot be interpreted as a guarantee given by the producer, but are to be regarded only as a means for choosing the right products in relation to the expected economically reasonable working life of the works.

2 Characteristics of the product and methods of verification

2.1 Characteristics of the product

The anchor corresponds to the drawings and information given in Annex 2, 3 and 4. The characteristic material values, dimensions and tolerances of the anchor not given in these Annexes shall correspond to the respective values laid down in the technical documentation[7] of this European Technical Approval.

The characteristic values for the design of the anchorages are given in Annex 5.

Each anchor is at least to be marked with the type, the works symbol, the anchor size and the length of the anchor.

The minimum anchorage depth shall be marked.

[7] The technical documentation of this European Technical Approval is deposited at the Deutsches Institut für Bautechnik and, as far as relevant for the tasks of the approved bodies involved in the attestation of conformity procedure, is handed over to the approved bodies.

The anchor shall only be packaged and supplied as a complete unit.

2.2 Methods of verification

The assessment of the fitness of the anchor for the intended use in relation to the requirements for safety in use in the sense of the Essential Requirement 4 has been made in compliance with

- the Guideline for European Technical Approval of "Plastic Anchors for Fixing of External Thermal Insulation Composite Systems with Rendering", ETAG 014, based on the use categories A, B, C and D,
- the EOTA Technical Report TR 025 "Determination of point thermal transmittance of plastic anchors for the anchorage of external thermal insulation composite systems (ETICS)" and
- the EOTA Technical Report TR 026 "Evaluation of plate stiffness from plastic anchors for fixing of external thermal insulation composite systems with rendering (ETICS)".

In addition to the specific clauses relating to dangerous substances contained in this European Technical Approval, there may be other requirements applicable to the products falling within its scope (e.g. transposed European legislation and national laws, regulations and administrative provisions). In order to meet the provisions of the Construction Products Directive, these requirements need also to be complied with, when and where they apply.

3 Evaluation and attestation of conformity and CE marking

3.1 System of attestation of conformity

According to the decision 97/463/EG of the European Commission[8] the system 2(ii) (referred to as system 2+) of attestation of conformity applies.

This system of attestation of conformity is defined as follows.

System 2+: Declaration of conformity of the product by the manufacturer on the basis of:

(a) Tasks for the manufacturer:
  (1) initial type-testing of the product;
  (2) factory production control;
  (3) testing of samples taken at the factory in accordance with a prescribed test plan.

(b) Tasks for the approved body:
  (4) certification of factory production control on the basis of:
    – initial inspection of factory and of factory production control;
    – continuous surveillance, assessment and approval of factory production control.

3.2 Responsibilities

3.2.1 Tasks of the manufacturer

3.2.1.1 Factory production control

The manufacturer shall exercise permanent internal control of production. All the elements, requirements and provisions adopted by the manufacturer shall be documented in a systematic manner in the form of written policies and procedures, including records of results performed. This production control system shall insure that the product is in conformity with this European Technical Approval.

The manufacturer may only use raw materials stated in the technical documentation of this European Technical Approval.

8 Official Journal of the European Communities L 198 of 25.07.1997.

The factory production control shall be in accordance with the control plan which is part of the technical documentation of this European Technical Approval. The control plan is laid down in the context of the factory production control system operated by the manufacturer and deposited at Deutsches Institut für Bautechnik.[9]

The results of factory production control shall be recorded and evaluated in accordance with the provisions of the control plan.

3.2.1.2 Other tasks of manufacturer

The manufacturer shall, on the basis of a contract, involve a body which is approved for the tasks referred to in section 3.1 in the field of anchors in order to undertake the actions laid down in section 3.2.2. For this purpose, the control plan referred to in sections 3.2.1.1 and 3.2.2 shall be handed over by the manufacturer to the approved body involved.

The manufacturer shall make a declaration of conformity, stating that the construction product is in conformity with the provisions of this European Technical Approval.

3.2.2 Tasks of approved bodies

The approved body shall perform

- the initial inspection of factory and of factory production control,
- continuous surveillance, assessment and approval of factory production control,

in accordance with the provisions laid down in the control plan.

The approved body shall retain the essential points of its actions referred to above and state the results obtained and conclusions drawn in a written report.

The approved certification body involved by the manufacturer shall issue an EC certificate of conformity of the factory production control stating the conformity with the factory production control of this European Technical Approval.

In cases where the provisions of the European Technical Approval and its control plan are no longer fulfilled the certification body shall withdraw the certificate of conformity and inform Deutsches Institut für Bautechnik without delay.

3.3 CE marking

The CE marking shall be affixed on each packaging of the anchor. The letters "CE" shall be followed by the identification number of the approved certification body, where relevant, and be accompanied by the following additional information:

- the name and address of the producer (legal entity responsible for the manufacturer),
- the last two digits of the year in which the CE marking was affixed,
- the number of the EC certificate for the factory production control,
- the number of the European Technical Approval,
- the number of the guideline for European Technical Approval
- use categories A, B, C and D.

[9] The control plan is a confidential part of the documentation of the European Technical Approval, but not published together with the ETA and only handed over to the approved body involved in the procedure of attestation of conformity. See section 3.2.2.

4 Assumptions under which the fitness of the product for the intended use was favourably assessed

4.1 Manufacturing

The European Technical Approval is issued for the product on the basis of agreed data/information, deposited with Deutsches Institut für Bautechnik, which identifies the product that has been assessed and judged. Changes to the product or production process, which could result in this deposited data/information being incorrect, should be notified to Deutsches Institut für Bautechnik before the changes are introduced. Deutsches Institut für Bautechnik will decide whether or not such changes affect the ETA and consequently the validity of the CE marking on the basis of the ETA and if so whether further assessment or alterations to the ETA shall be necessary.

4.2 Design of anchorages

4.2.1 General

Fitness for the intended use of the anchor is given under the following conditions:

- The design of anchorages is carried out in compliance with ETAG 014 "Guideline for European Technical Approval of Plastic Anchors for Fixing of External Thermal Insulation Composite Systems with Rendering" under the responsibility of an engineer experienced in anchorages.
- Verifiable calculation notes and drawings shall be prepared taking account of the loads to be anchored, the nature and strength of the base materials, the thickness of insulation and the dimensions of the anchorage members as well as of the relevant tolerances.
- The anchor shall only be used for the transmission of wind suction loads. All other loads such as dead load and restraints shall be transmitted by the adhesion of the relevant external thermal insulation composite system.

Verification of stability of the external thermal insulation composite system including application of loads on the anchor and on the additional plates is not subject of this European Technical Approval.

4.2.2 Resistance

The characteristic values of the tension resistance of the anchor are given in Annex 5, Table 7. If there is a difference in the characteristic values of the base material in Table 5 or a similar base material of use category B, C and D is supposed to be used; job-site tests according to 4.4 shall be carried out and the characteristic tension resistance shall be determined.

4.2.3 Characteristic values, spacing and dimensions of anchorage member

The minimum spacing and dimensions of anchorage member according to Annex 4, Table 6 shall be observed.

4.2.4 Displacement behaviour

The displacements are given in the following table.

Table 4.1: Displacements for termoz CN 8

Base material	Bulk density class ρ [kg/dm³]	Minimum compressive strength f_b [N/mm²]	Tension load N [kN]	Displacements $\delta_m(N)$ [mm]
Concrete C16/20 - C50/60 (EN 206-1)			0,30	0,3
Sand-lime solid brick, KS (e.g. acc. to DIN 106)	≥ 1,8	12	0,30	0,3
Clay brick, Mz (e.g. acc. to DIN 105)	≥ 2,0	12	0,30	0,5
Solid concrete block, Vbn (e.g. acc. to DIN 18153)	≥ 2,0	20	0,25	0,3
Vertically perforated sand-lime brick, KSL (e.g. acc. to DIN 106)	≥ 1,4	20	0,25	0,3
		12	0,15	0,2
Vertically perforated clay brick, HLz (e.g. acc. to DIN 105)	≥ 1,0	12	0,20	0,2
Lightweight concrete hollow blocks, Hbl (e.g. acc. to DIN 18151)	≥ 1,2	10	0,20	0,2
Lightweight concrete solid blocks, Vbl (e.g. acc. to DIN 18152)	≥ 1,4	8	0,20	0,2
Lightweight aggregate concrete, LAC (e.g. acc. to EN 1520)	≥ 0,8	4	0,15	0,3
		6	0,20	

4.2.5 Point thermal transmittance according EOTA Technical Report TR 025

The point thermal transmittance (CHI-value) of the anchor according EOTA Technical Report TR 025 "Determination of point thermal transmittance of plastic anchors for the anchorage of external thermal insulation composite systems (ETICS)" is given in the following table for use category A, B, C and D respectively.

Table 4.2: Point thermal transmittance

Anchor type	Insulation thickness h_D [mm]	Point thermal transmittance χ [W/K]
termoz CN 8	60	0,001
	80 - 180	0,000
	200 - 300	0,000
	320 - 340	0,001

4.2.6 Plate stiffness according EOTA Technical Report TR 026

The plate stiffness of the anchor according EOTA Technical Report TR 026 "Evaluation of plate stiffness from plastic anchors for fixing of external thermal insulation composite systems with rendering (ETICS)" is given in the following table.

Table 4.3: Plate stiffness

Anchor type	Diameter of the anchor plate [mm]	Load resistance of the anchor plate [kN]	Plate stiffness [kN/mm]
termoz CN 8	60	1,6	0,4

4.3 Installation

The fitness for use of the anchor can only be assumed if the following conditions of installation are met:

- Anchor installation carried out by appropriately qualified personnel under the supervision of the person responsible for technical matters on site.
- Use of the anchor only as supplied by the manufacturer without exchanging any component of the anchor.
- Anchor installation in accordance with the manufacturer's specifications and drawings using the tools indicated in this European Technical Approval.
- Checks before placing the anchor, to ensure that the characteristic values of the base material in which the anchor is to be placed, is identical with the values, which the characteristic loads apply for.
- Observation of the drill method (Drill holes in masonry made of vertically perforated clay bricks may only be drilled using the rotary drill. Other drilling methods may also be used if job-site tests according to 4.4 evaluate the influence of hammer or impact drilling.)
- Placing drill holes without damaging the reinforcement
- Temperature during installation of the anchor ≥ 0 °C
- Exposure to UV due to solar radiation of the anchor not protected by rendering ≤ 6 weeks.

4.4 Job site tests

4.4.1 General

The characteristic tension resistance of the anchor may be determined by means of job site pull-out tests carried out on the material actually used, if a characteristic resistance of the base material does not exist (for example masonry made of other solid masonry units, hollow or perforated bricks, hollow blocks).

The characteristic resistance of the anchor shall be determined by carrying out at least 15 centric tension load pull-out tests on site. These tests are also possible under the same conditions in a laboratory.

Execution and evaluation of the tests as well as the issue of the test report and the determination of the characteristic resistance should be under the responsibility of approved testing laboratories or the supervision of the person responsible for the execution of the works on site.

Number and position of the anchors to be tested shall be adapted to the relevant special conditions of the site and, for example, to be increased in the case of hidden and larger areas, such that reliable information about the characteristic resistance of the anchor in the base material in question can be derived. The tests shall take into account the most unfavourable conditions of the practical execution.

4.4.2 Assembly

The anchor to be tested shall be installed (e.g. preparation of drill hole, drilling tool to be used, drill bit) and the spacing and the edge distances shall be in the same way as planned for the fixing of the external thermal insulation composite system.

Depending on the drilling tool and according to ISO 5468, hard metal hammer-drill bits or hard metal percussion drill bits, respectively, shall be used. The cutting diameter shall be at the upper tolerance limit.

4.4.3 Execution of test

The test rig used for the pull-out tests shall provide a continuous slow increase of the load, controlled by a calibrated load cell. The load shall apply perpendicular to the surface of the base material and shall be transmitted to the anchor via a hinge. The reaction forces shall be transmitted into the base material at a distance of at least 15 cm from the anchor. The load shall be increased continuously in a way that the ultimate load is reached after about 1 minute. The load is measured when the ultimate load (N_1) is achieved.

4.4.4 Test report

The test report shall include all information necessary to assess the resistance of the tested anchor. It shall be included in the construction dossier.

The minimum data required are:

- Construction site, owner of building; date and location of the tests, air temperature; type of member (ETICS) to be fixed
- Masonry (type of brick, strength class, all dimensions of bricks, mortar group); Visual assessment of masonry (flush joints, joint clearance, regularity)
- Plastic anchor and nail; value of the cutting diameter of hard metal hammer-drill bits, measured before and after drilling
- Test rig; results of tests including the indication of value N_1
- Tests carried out or supervised by; signature

4.4.5 Evaluation of test results

The characteristic resistance N_{Rk1} is obtained from the measured values of N_1 as follows:

$N_{Rk1} = 0{,}6 \cdot N_1 \leq 1{,}5$ kN

N_1 = the mean value of the five smallest measured values at the ultimate load

5 Indications for the manufacturer

5.1 Responsibility of the manufacturer

It is in the responsibility of the manufacturer to ensure that the information on the specific conditions according to 1 and 2 including Annexes referred to 4 is given to those who are concerned. This information may be made by reproduction of the respective parts of the European Technical Approval. In addition, all installation data shall be shown clearly on the packaging and/or on an enclosed instruction sheet, preferably using illustrations.

The minimum data required are:

- base material for the intended use,
- drill bit diameter,
- maximum thickness of the ETICS,
- minimum effective anchorage depth,
- minimum hole depth,

- information on the installation procedure,
- identification of the manufacturing batch.

All data shall be presented in a clear and explicit form.

5.2 Packaging, transport and storage

The anchor shall only be packaged and supplied as a complete unit.

The anchor shall be stored under normal climatic conditions in its original light-proof packaging. Before installation, it shall not be extremely dried nor frozen.

Georg Feistel
Head of Department

beglaubigt
Scheller

termoz CN 8 / 110-230

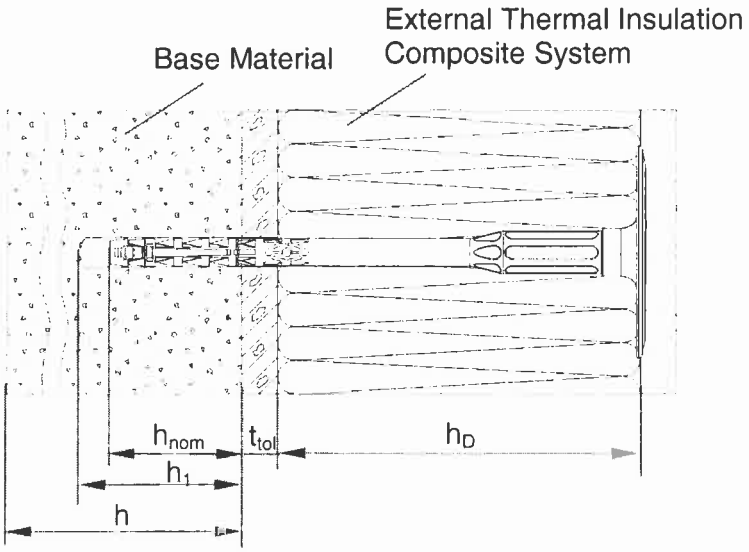

termoz CN 8 / 250-390

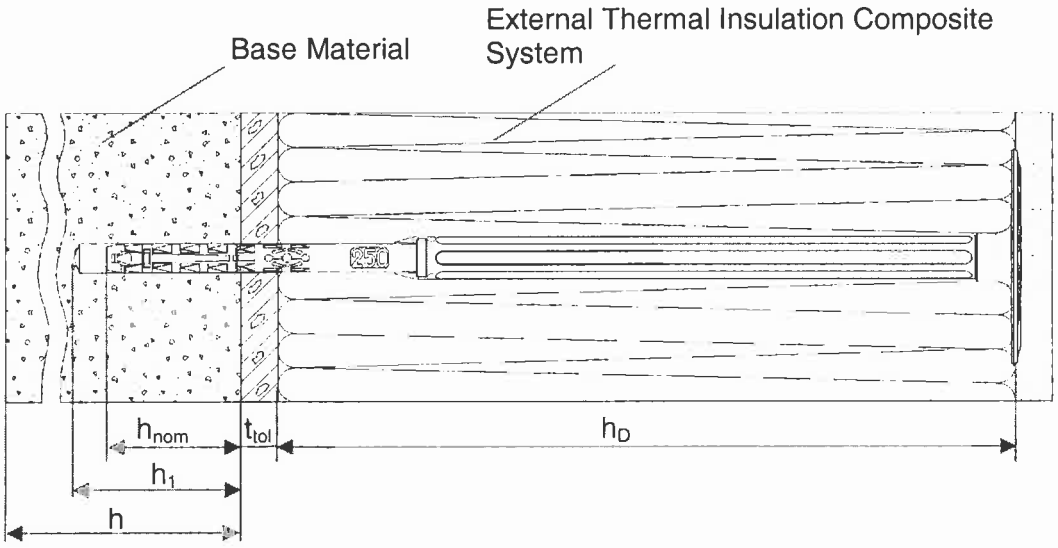

Intended Use

Fixing of external thermal insulation composite systems in concrete and masonry

Legend

h_{nom} = Overall plastic anchor embedment depth in the base material

h_1 = Depth of drilled hole to deepest point

h = Thickness of member (wall)

h_D = Thickness of insulation material

t_{tol} = Thickness of equalizing layer or non–load bearing coating

nailed-in anchor termoz CN 8	**Annex 1** of European Technical Approval ETA-09/0394
Intended Use	

termoz CN 8 / 110 - 230

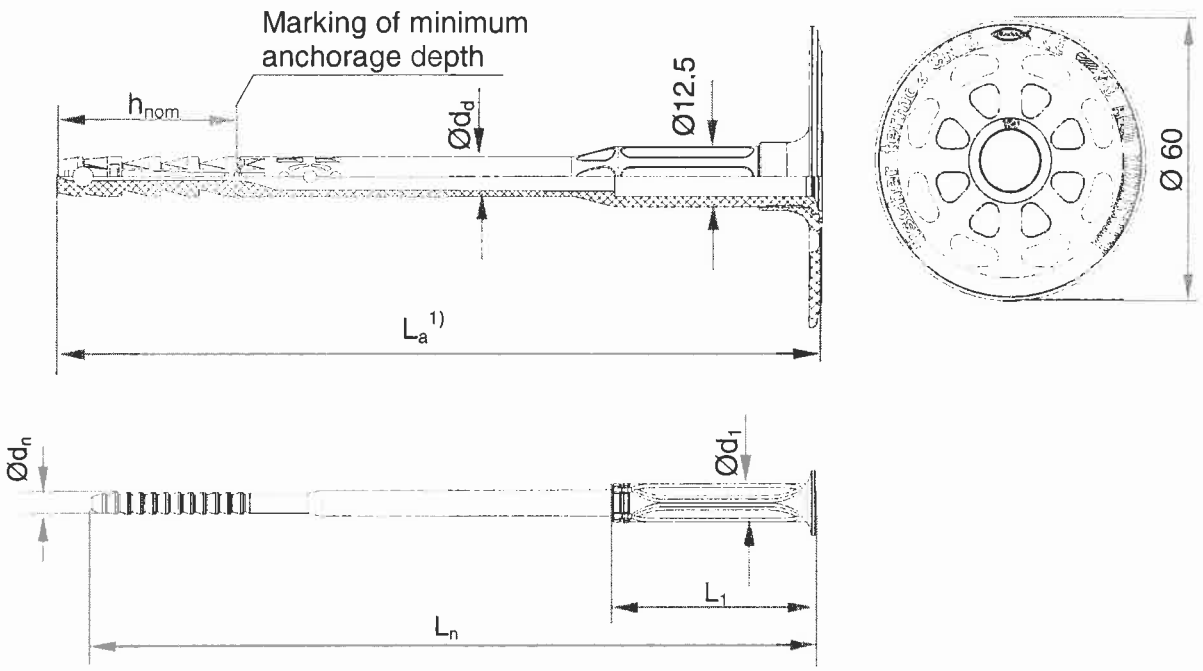

1) Various lengths of the anchors are permissible:

termoz CN 8 : 110-230
$L_{a\,min} \geq 110$ mm; $L_{a\,max} \leq 230$ mm
L_a = length of accompanying specific nail L_n + 4 mm

Determination of maximum thickness of insulation: $h_D = L_a - h_{nom} - t_{tol}$

e.g. for termoz CN 8x150:
$L_a = 148$ mm, $h_{nom} = 35$ mm, $t_{tol} = 10$ $h_D = 148 - 35 - 10 \approx 100$ mm

Table 1: Dimensions termoz CN 8 / 110 - 230

Anchor type	Anchor sleeve		Accompanying specific compound nail		
	Ø d_d [mm]	h_{nom} [mm]	Ø d_n [mm]	L_1 [mm]	Ø d_1 [mm]
termoz CN 8/110-230	8	35	4,5	40	8

nailed-in anchor termoz CN 8	**Annex 2** of European Technical Approval ETA-09/0394
Dimensions	

termoz CN 8 / 250 - 390

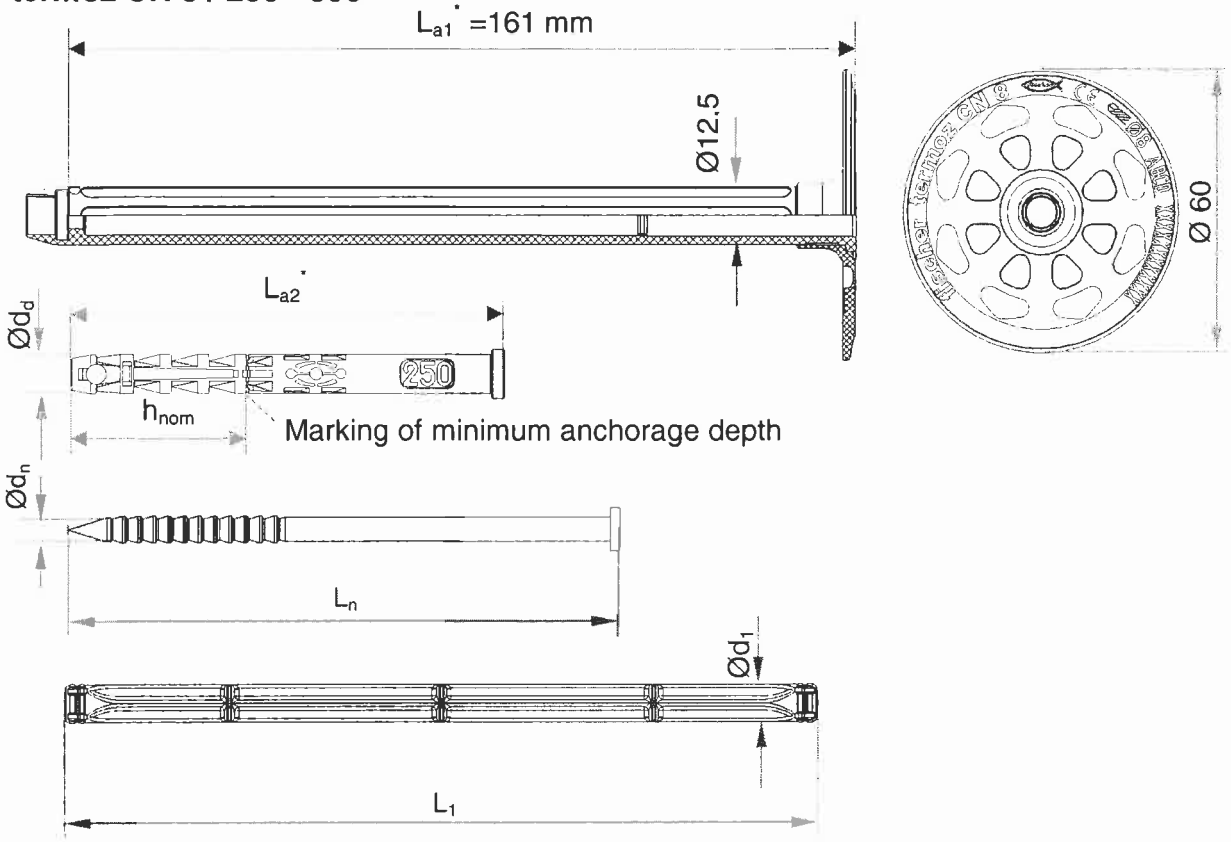

*) Various lengths of the anchors are permissible:

termoz CN 8: $L_{a\,min} = L_{a1} + L_{a2} \geq 250$ mm; $L_{a\,max} = L_{a1} + L_{a2} \leq 390$ mm
250 - 390 L_a = length of nail L_n + 157,5 mm

Determination of maximum thickness of insulation: $h_D = L_a - h_{nom} - t_{tol}$

e.g. for termoz CN 8x350:
L_a = 348 mm, h_{nom} = 35 mm, t_{tol} = 10 $h_D = 348 - 35 - 10 \approx 300$ mm

Table 2: Dimensions termoz CN 8 / 250 - 390

Anchor type	Anchor sleeve		Nail	Plastic cylinder	
	Ø d_d [mm]	**h_{nom}** [mm]	**Ø d_n** [mm]	**L_1** [mm]	**Ø d_1** [mm]
termoz CN 8/250-390	8	35	4,5	157	8

nailed-in anchor termoz CN 8	**Annex 3** of European Technical Approval ETA-09/0394
Dimensions	

Table 3: Marking

Anchor type	termoz CN 8
Plate diameter	Ø 60
Works symbol	or or blank
Size of anchor	Ø 8
Length of anchor	L_a
Example	fischer (optinonal) termoz CN 8 or or blank CE (optional Ø 8 (optional); ABCD (optional) XXXXX= various additional marking allowed

Table 4: Materials

Designation	Material
Anchor sleeve	PP, colour: grey
Shaft (termoz CN 8 / 250-390)	PA6 GF 30 colour: grey
Plastic cylinder (termoz CN 8 / 250-390)	PA 6 GF 50
Specific compound nail (termoz CN 8 / 110-230) or specific nail (termoz CN 8 / 250-390)	PA 6 GF 50 (plastic part of compound nail) Steel ($f_{yk} \geq 400$ N/mm²; $f_{uk} \geq 500$ N/mm²) gal Zn A2G or A2F according to EN ISO 4042
Slip-on plate	PA6, GF 30 or PA6, GF 35, colour: grey, orange, red, green, yellow, blue

Table 5: Installation parameters

Anchor type				termoz CN 8
Drill hole diameter	d_0	=	[mm]	8
Cutting diameter of drill bit	d_{cut}	≤	[mm]	8,45
Depth of drill hole to deepest point	h_1	≥	[mm]	45
Overall plastic anchor embedment depth in the base material	h_{nom}	≥	[mm]	35

Table 6: Minimum distances and dimensions

Anchor type				termoz CN 8
Minimum thickness of member	h	=	[mm]	100
Minimum allowable spacing	s_{min}	=	[mm]	100
Minimum allowable edge distance	c_{min}	=	[mm]	100

Scheme of distances and spacing

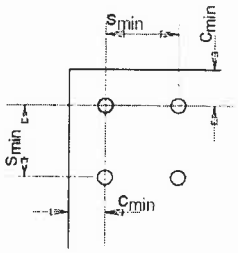

nailed-in anchor termoz CN 8	**Annex 4**
Marking / Materials Installation parameters Distances and Spacing	of European Technical Approval ETA-09/0394

Table 7: Characteristic resistance N_{Rk} in [kN] to tension loads for a single anchor

Base material	Bulk density class ρ [kg/dm^3]	Minimum compressive strength f_b [N/mm^2]	Remarks	Characteristic resistance termoz CN 8 N_{Rk} [kN]
Concrete ≥ C12/15	-	-	EN 206	**0,9**
Concrete ≥ C16/20	-	-	EN 206	**0,9**
Concrete C50/60	-	-	EN 206	**0,9**
Sand-lime solid bricks e.g. acc. to DIN 106, KS	≥ 1,8	12	Cross section reduced up to 15% by perforation vertically to the resting area	**0,9**
Clay bricks e.g. acc. to DIN 105, Mz	≥ 2,0	12	Cross section reduced up to 15% by perforation vertically to the resting area	**0,9**
Solid concrete block, e.g. acc. to DIN 18153, Vbn	≥ 2,0	20	Cross section reduced up to 10% by perforation vertically to the resting area	**0,75**
Vertically perforated sand-lime bricks e.g. acc. to DIN 106, KSL	≥ 1,4	20	Cross section reduced more than 15% by perforation vertically to the resting area Exterior web thickness ≥ 23 mm	**0,75**
		12		**0,5**
Vertically perforated clay bricks e.g. acc. to DIN 105, HLz	≥ 1,0	12	Cross section reduced more than 15% and less than 50% by perforation vertically to the resting area Exterior web thickness ≥ 12 mm	**0,6**
Lightweight concrete hollow blocks e.g. acc. to DIN 18151, Hbl	≥ 1,2	10	See Table 9	**0,6**
Lightweight concrete solid blocks e.g. acc. to DIN 18152, Vbl	≥ 1,4	8	See Table 8	**0,6**
Lightweight aggregate concrete, LAC	≥ 0,8	4	DIN EN 1520	**0,4**
		6		**0,6**
Partial safety factor for anchor resistance [1)]			γ_M	**2,0**

1) In absence of other national regulations

nailed-in anchor termoz CN 8	**Annex 5** of European Technical Approval ETA-09/0394
Characteristic resistance	

Table 8: Geometry of Lightweight concrete solide blocks (Vbl) according to DIN 18152

Geometry	Thickness of brick b [mm]	Number of slots rows	web a [mm]	Width of slot s [mm]
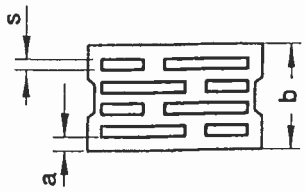	175	2	≥ 31	≥ 11
	240	3 or 4		
	300	4 or 5		
	365	5 or 6		
	490	6 or 7		

Table 9: Geometry of Lightweight concrete hollow blocks (Hbl) according to DIN 18151

Geometry	Thickness of brick b [mm]	Outer web in longitudinal direction a [mm]	Anchor type termoz CN 8
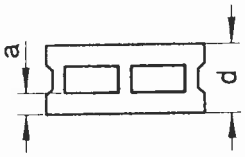	175	50	●
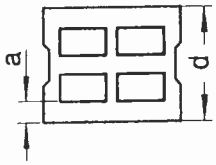	240 300	50	●
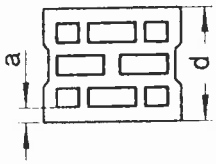	240 300 365	38	●
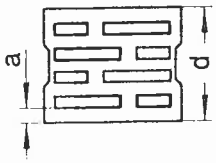	240 300 365	38	●

The anchor shall be placed in a way that the spreading part is anchored in the web of the brick

nailed-in anchor termoz CN 8	**Annex 6** of European Technical Approval ETA-09/0394
Geometry of lightweight concrete solid blocks (Vbl) and lightweight concrete hollow blocks (Hbl)	

Slip-on plates DT 90, DT 110 and DT 140

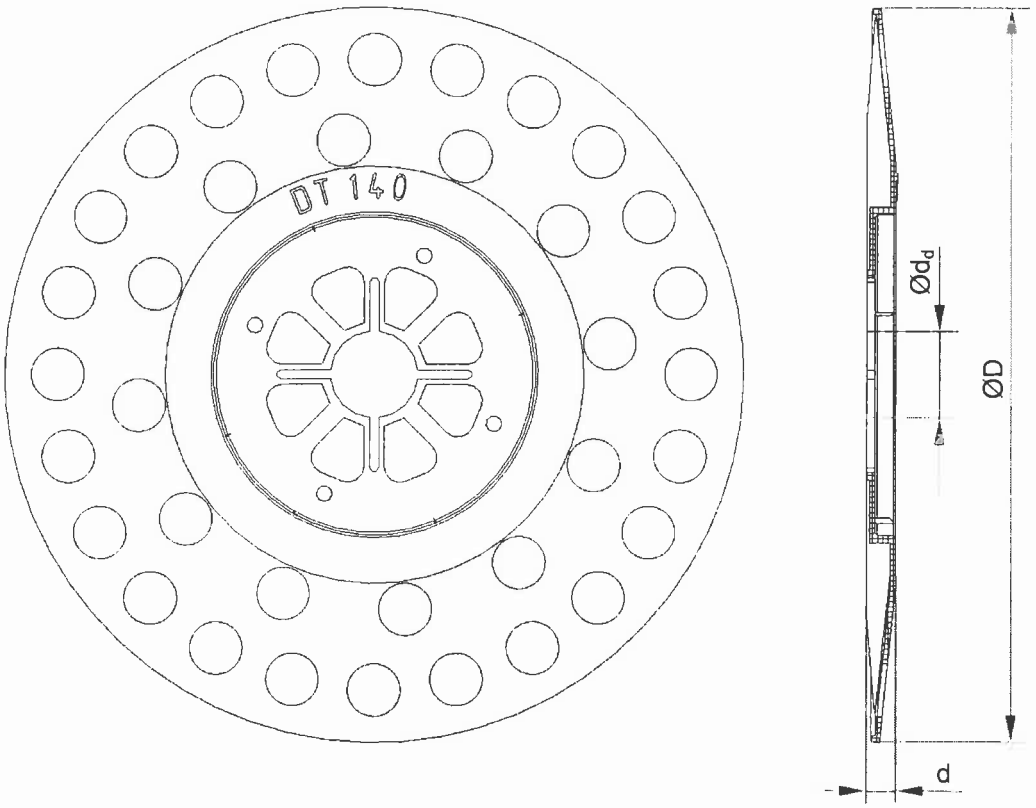

Table 10: Slip-on plates, diameters and material

Slip-on plate	Ø D [mm]	Ø d_d [mm]	d [mm]	Material
DT 90	90	16,5	5,5	PA 6
DT 110	110	16,5	5,5	PA 6
DT 140	140	16,5	5,5	PA 6

nailed-in anchor termoz CN 8	**Annex 7** of European Technical Approval ETA-09/0394
Slip-on plates combined with termoz CN 8	